Map showing Longview RV Resort
in relation to entire property

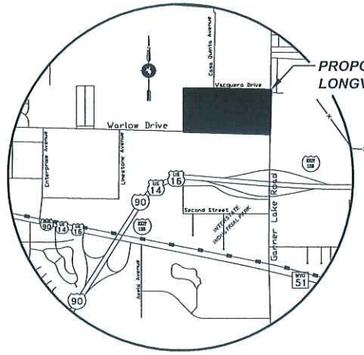

VICINITY MAP
NOT TO SCALE

RV LOT AREAS

LOT	AREA S.F.	LOT	AREA S.F.	LOT	AREA S.F.
1	2078	44	2078	87	2078
2	2078	45	2078	88	2078
3	2078	46	2078	89	2078
4	2078	47	2078	90	2078
5	2080	48	2078	91	2078
6	1972	49	2078	92	2078
7	2514	50	2078	93	2078
8	2338	51	2078	94	2078
9	2338	52	2078	95	2075
10	2338	53	2078	96	1769
11	2338	54	2398	97	2208
12	2338	55	2112	98	2073
13	2338	56	2074	99	2078
14	2325	57	2078	100	2078
15	1994	58	2078	101	2078
16	2122	59	2078	102	2078
17	2338	60	2078	103	2078
18	2338	61	2078	104	2078
19	2338	62	1912	105	2078
20	2338	63	2719	106	2078
21	2338	64	2238	107	2086
22	2338	65	2439	108	1963
23	2338	66	3519	109	2033
24	2513	67	1819	110	2078
25	2286	68	1732	111	2078
26	2316	69	1732	112	2078
27	2338	70	1732	113	2041
28	2338	71	1732	114	1584
29	2338	72	1732	115	2076
30	2338	73	1732	116	2078
31	2338	74	1732	117	2078
32	2338	75	1732	118	2078
33	2123	76	1732	119	2078
34	1955	77	1732	120	2078
35	2078	78	1935	121	2078
36	2078	79	2416	122	2078
37	2078	80	2718	123	2003
38	2078	81	1747	124	1552
39	2078	82	1732	125	2078
40	2121	83	1732	126	2078
41	3596	84	1578	127	2078
42	2499	85	2384	128	2078
43	2083	86	2076	129	2078
				130	2078

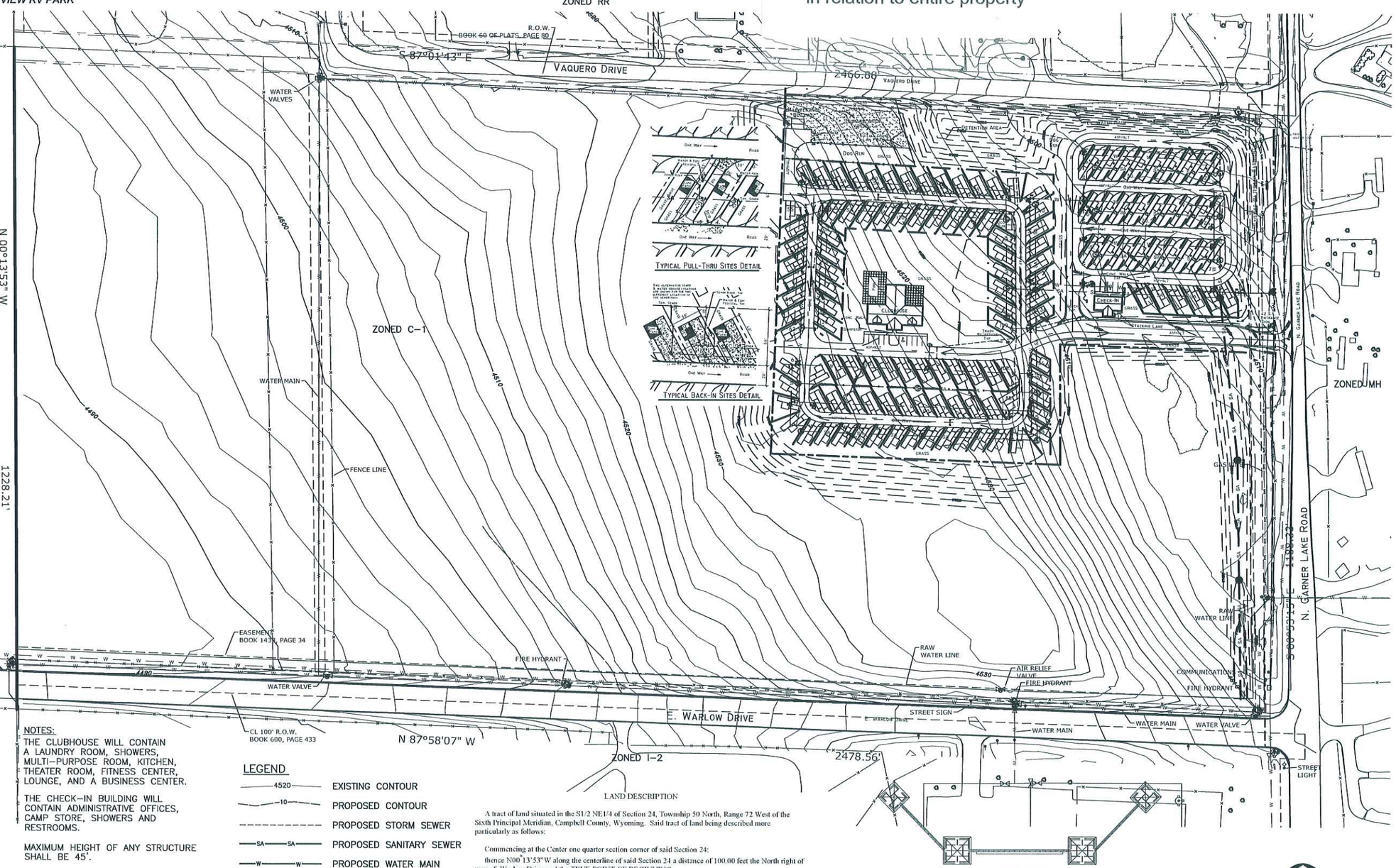

Approved by the City of Gillette Planning Commission this ____ day of _____ A.D., _____.

Chairman

Attest: Secretary

The Development Plan was filed for record in the Office of the Clerk and recorded at ____o'clock, ____ M., _____.

County Clerk

It is agreed that the conditions of this development plan shall be binding upon the undersigned, their successors and assigns, shall limit and control the issuance and validity of all zoning permits, and shall restrict and limit the location, construction and use of all land and structures included within the plan to all of the conditions set forth upon the plan; and that the development plan may be amended only upon application to and approval by the Planning Commission.

Executed this _____day of _____, _____, by:

STATE OF WYOMING }
County of Campbell } ss.

The foregoing instrument was acknowledged before me this _____day of _____ A.D., _____, by _____, as a free and voluntary act and deed.

Witness my hand and official seal.

Notary Public

My Commission Expires: _____

NOTES:

THE CLUBHOUSE WILL CONTAIN A LAUNDRY ROOM, SHOWERS, MULTI-PURPOSE ROOM, KITCHEN, THEATER ROOM, FITNESS CENTER, LOUNGE, AND A BUSINESS CENTER.

THE CHECK-IN BUILDING WILL CONTAIN ADMINISTRATIVE OFFICES, CAMP STORE, SHOWERS AND RESTROOMS.

MAXIMUM HEIGHT OF ANY STRUCTURE SHALL BE 45'.

MAILBOX SHALL BE IN CLUBHOUSE.

PROPERTY IS CURRENTLY ZONED C-1.

AREA CALCULATIONS:

RV AREA	13.32 AC.
BUILDINGS	8.865 S.F.
PAVED ROADS & PARKING	145,476 S.F.
WALKS & PATIOS	29,433 S.F.
GRAVEL	126,545 S.F.
OPENSPACE	138,015 S.F.
TOTAL AREA OF SITE	68.49 AC.

LEGEND

4520	EXISTING CONTOUR
10	PROPOSED CONTOUR
	PROPOSED STORM SEWER
SA — SA	PROPOSED SANITARY SEWER
W — W	PROPOSED WATER MAIN
	PROPOSED FENCE

LAND DESCRIPTION

A tract of land situated in the S1/2 NE1/4 of Section 24, Township 50 North, Range 72 West of the Sixth Principal Meridian, Campbell County, Wyoming. Said tract of land being described more particularly as follows:

Commencing at the Center one quarter section corner of said Section 24;

thence N00°13'53"W along the centerline of said Section 24 a distance of 100.00 feet the North right of way of Warlow Drive and the TRUE POINT OF BEGINNING;

thence N00°13'53"W along the said centerline of Section 24 a distance of 1228.21 feet the South boundary of Los Caballos Subdivision;

thence S87°01'43"E along the said South boundary of Los Caballos Subdivision a distance of 2466.88 feet to the West right of way of Garner Lake Road;

thence S00°53'15"E along the said West right of way of Garner Lake Road a distance of 1188.33 feet to the said North right of way of Warlow Drive;

thence N87°58'07"W along the said North right of way of Warlow Drive a distance of 2478.56 feet to the POINT OF BEGINNING.

Said tract of land contains 68.49 acres, more or less, subject to all rights, restrictions, reservations, and/or easements of sight and record.

PLAN VIEW

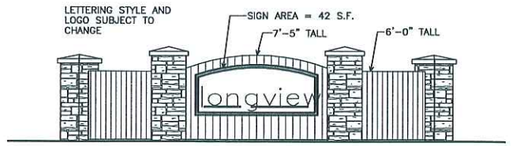

ELEVATION

ENTRANCE SIGN DETAILS
NOT TO SCALE

NORTH

0 100 200 300
SCALE IN FEET

Sheet No. 1 of 4

Date: 3-5-2008
Revisions:
Drawn By: SCW Drawing #: 951

donald c. westph associates, inc.
landscape architecture & site planning
oregon plaza house
71 n. bivemoor, p.o. box 1313
tel. (248) 651-3518 fax (248) 651-0450
www.westphal.com

LONGVIEW RV RESORT OVERALL DEVELOPMENT PLAN

GILLETTE
CAMPBELL COUNTY
WYOMING

951 – LONGVIEW